Analog Test Engines

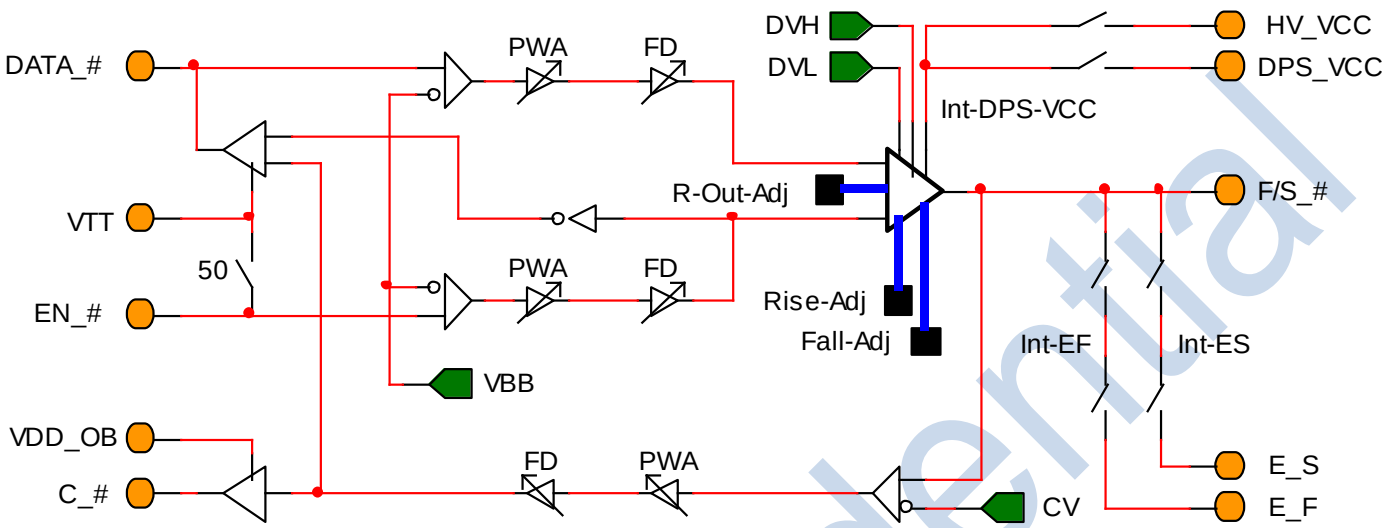

PE800 / 805 – Octal, 250 / 400 Mb/s, 8V Burn-In PE

Pin Electronics – Driver
- 250 / 400 Mb/s Fmax
- 50Ω / 25Ω / 16Ω Impedance Options
- Adjustable slew rate (0.1 V/ns to 1 V/ns)
- Short-Circuit Limiting
- 2 Level Driver w/ on-chip levels
- -1V to +7V Output Range

Pin Electronics – Comparator
- 1 Gb/s Fmax
- Single comparator w/ on-chip threshold
- -2V to +7V Input Range
- Selectable 25 mV Hysteresis

Deskew
- Fine Delay
  Adjustable from 1 ns to 8 ns
  Resolution from 1 ps to 8 ps
- Pulse Width Adjust ±512 ps w/ 4 ps res
- Bypass Power Down Option

Real Time Data I/O
- Asynchronous Interface
- 1-Pin Bidirectional RT_IO Option
- Adjustable FPGA Interface
  - Programmable Input Threshold
  - Adjustable Comparator VOH

Built-In Protection
- Short-Circuit Protection / Alarm
- Over Temperature Protection / Alarm
- F/S_# Continuity Checker
- DUT Ground Continuity Checker

2 Pin Serial Port

Power / Package
- 72 Lead, 10 mm X 10 mm QFN
  - Lead Free
  - Exposed Heat Slug on the Bottom
- 250 mW to 600 mW / Channel
- Integrated Power-Management Switches

Recommended Applications
- Packaged Part Burn-In Test
- In-Circuit PCB Test
- Low-Cost Functional Test
- BIST / Scan Test

ATE Confidential